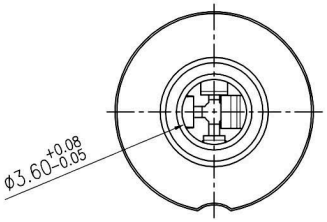

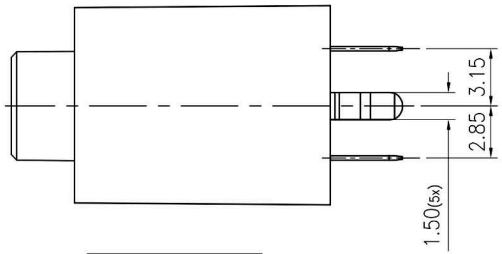

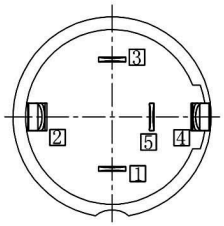

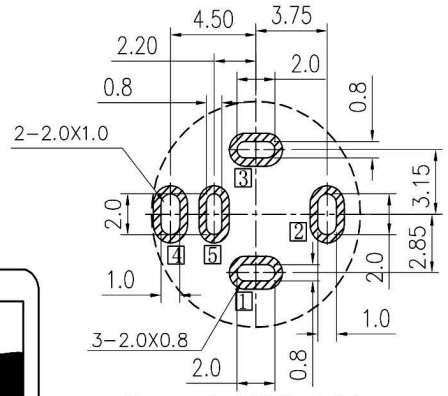

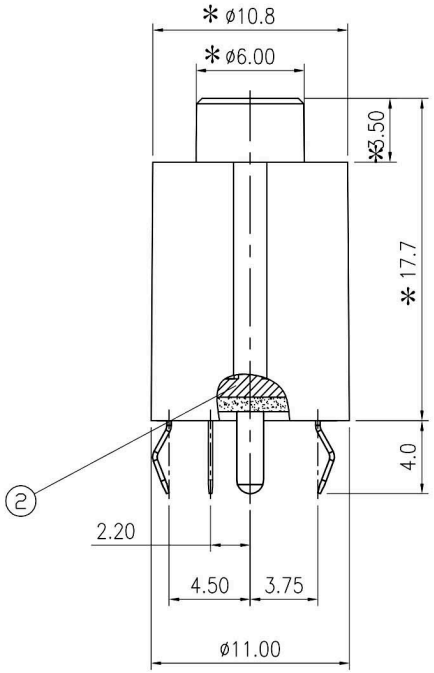

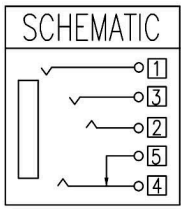

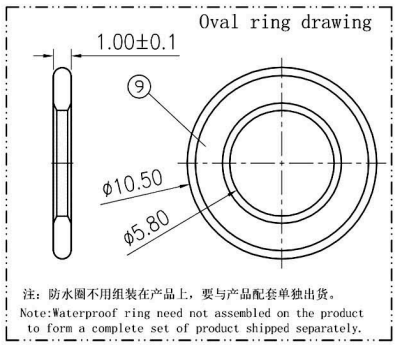

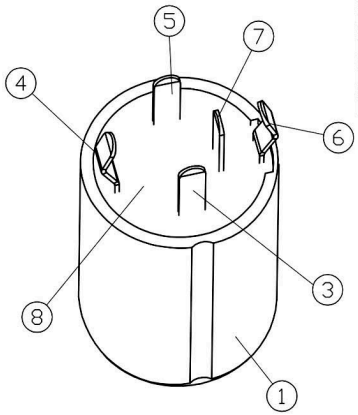

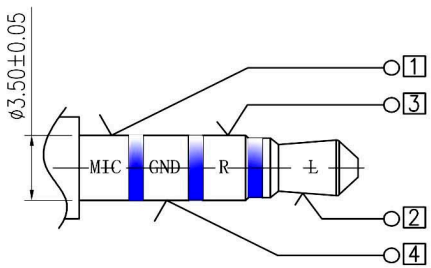

SPECIFIATIONS:

1.INSULATION RESISTANCE:A VOLTAGE OF 500V DC SHALL BE APPLIED TO THE TERMINALS, AFTER WHICH MEASUREMENT SHALL BE MADE. A GAUGE FOR THE MEASUREMENT SHALL BE USED THE INSULATED GAUGE;

2.CONTACT RESISTANCE:30mΩ OR LESS;

3.VOLTAGE PROOF:500V AC FOR ONE MINUTE;

4.DURABILITY:5,000 INSERTION/REMOVAL CYCLES(MINIMUM);

5. INSERTION FORCE:0.4KGF~2.0KGF;

6. WITHDRAWAL FORCE:0.4KGF~2.0KGF;

7. USING PLUG:ø3.5MM"4-POLE STERO EARPHONE(LCH/RCH/GND/MIC) PROVIDED THAT THEY CONFORM TO JIS C6560;

8. HOUSING STERNGTH IS 50N MAX;

Note:FOR REFLOW SOLDERING LEAD-FREE PROCESS & THE O-RING CAN NOT GO THROUGH THE IR PROCESS WITH WATERPROOF CONNECTOR TOGETHER .

9. Housings and O-rings are packed separately.

10.The connector can go through the IR process once only.

LTR	PART NAME	QTY	MATERIAL	REMARK
9	RUBBER RING	1	SILICONE	BLUE
8	BOND	1	EPOXY	N/A
7	SHUNT TERMINAL 5	1	PHOSPHOR BRONZE t=0.25	MB:Ni Sn PLATED
6	RING SPRING−2 4	1	PHOSPHOR BRONZE t=0.25	MB:Ni Sn PLATED
5	RING SPRING−1 3	1	PHOSPHOR BRONZE t=0.25	MB:Ni Sn PLATED
4	TIP SPRING 2	1	PHOSPHOR BRONZE t=0.25	MB:Ni Sn PLATED
3	EARTH SPRING 1	1	PHOSPHOR BRONZE t=0.25	MB:Ni Sn PLATED
2	COVER	1	PBT	UL94V−0 BLACK
1	HOUSING	1	PBT	UL94V−0 BLACK

RoHS Compliant

HSM 玄茂科技股份有限公司
HSUAN MAO TECHNOLOGY CO., LTD.

APPD. 核准

DWG. 製圖 Betty

DATE 制表日 2021/01/27

SCALE 比例 參考

UNIT 單位 MM

PAGE 張數 1 OF 1

-TOLERANCES- UNLESS OTHERWISE SPECIFIED 公差
X.X ±0.30 X.X° ±3°
X.XX ±0.25 X.XX° ±1°
X.XXX ±0.20

SIZE. 紙張尺寸 A4

REV. 版次 A

PART NAME 品名
Φ3.5MM EARPHONE JACK WATERPROOF TYPE:IP67
DIP 180° TYPE 5PIN (STEREO) WITH KINK FOOT
TIN PLATING BLACK COLOR REEL PACKING ROHS

PART NO. 料號 C9623-05YTABR0R