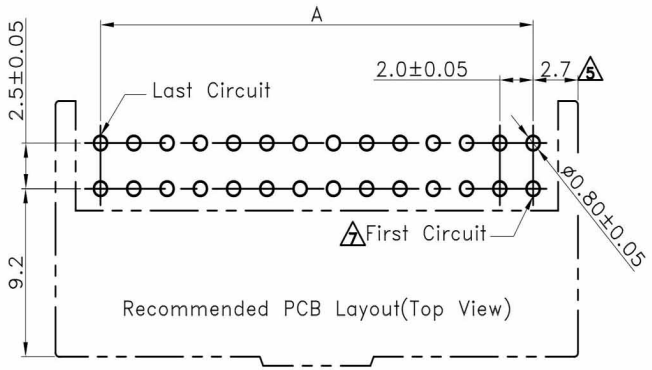

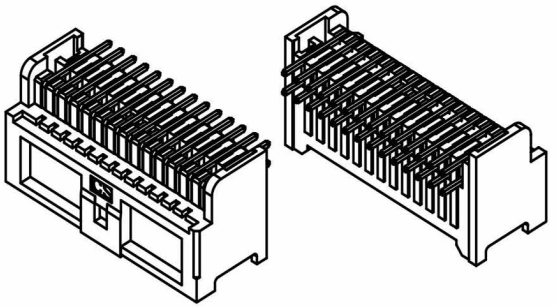

■ SPECIFICATIONS

- Voltage Rating : 250V AC/DC
- Current Rating : 3.0A AC/DC(22#AWG)
- Withstanding Voltage : 1,000V AC/minute
- Insulation Resistance : 1,000MΩ min.
- Temperature Range : - 25℃ to + 85℃
- 5 Contact Resistance : 20mΩ max.

■ WAFER

- Poles : 8~40(Right Angle , Double Row)
- 6 Material : Pin : Phos Bronze,Tin Plated
  Base : PBT+20%G.F UL94V-0
- Packing : Tube Packing

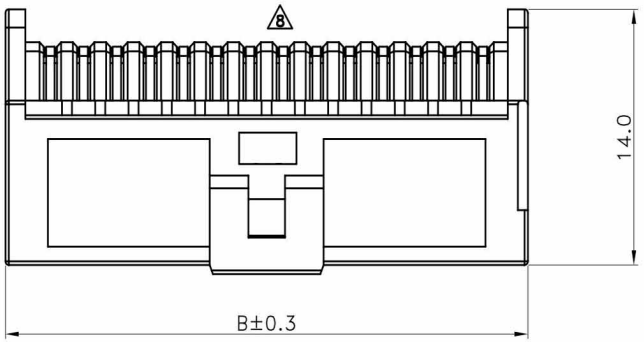

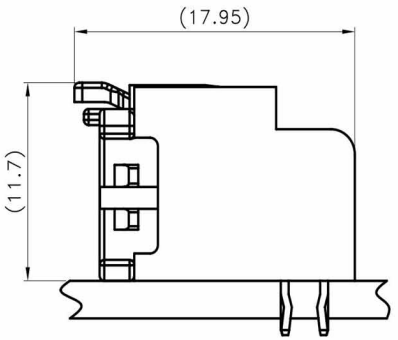

Mated Darwing (REF.)

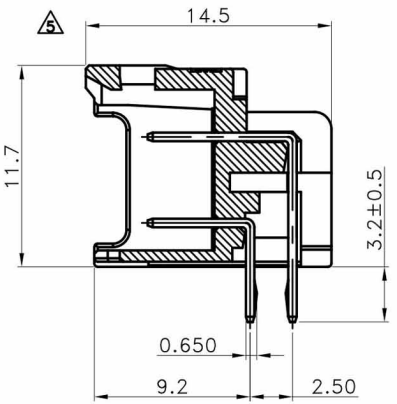

A–A Section

Poles	Dimensions (mm)		
	A	B	C
4x2	6.0	11.4	9.8
5x2	8.0	13.4	11.8
6x2	10.0	15.4	13.8
7x2	12.0	17.4	15.8
8x2	14.0	19.4	17.8
9x2	16.0	21.4	19.8
10x2	18.0	23.4	21.8
11x2	20.0	25.4	23.8
12x2	22.0	27.4	25.8
13x2	24.0	29.4	27.8
14x2	26.0	31.4	29.8
15x2	28.0	33.4	31.8
16x2	30.0	35.4	33.8
17x2	32.0	37.4	35.8
18x2	34.0	39.4	37.8
19x2	36.0	41.4	39.8
20x2	38.0	43.4	41.8

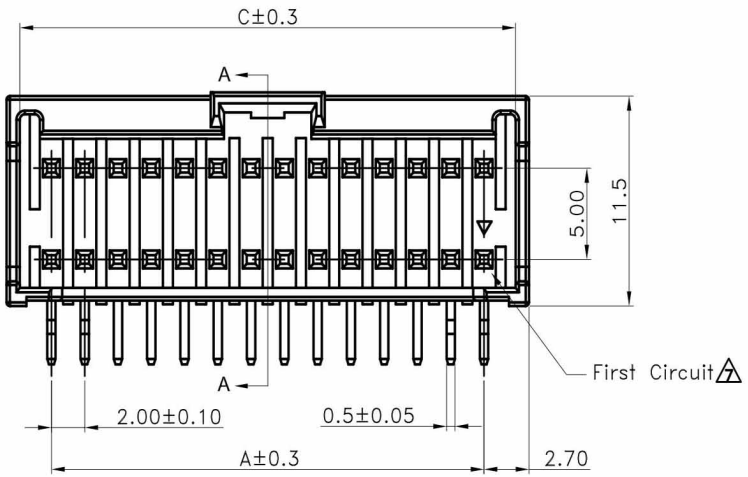

RoHS Compliant

HSM 玄茂科技股份有限公司
HSUAN MAO TECHNOLOGY CO., LTD.

APPD. 核准: Betty	SCALE 比例: 參考	TOLERANCE 容許公差: .0 ± 0.30, .00 ± 0.20, ANG. ± 3°	PART NAME 品名: 2.0mm WAFER RIGHT ANGLE TYPE DUAL ROWS 2XXXP TIN PLATED TUBE PACKING WHITE COLOR ROHS
DWG. 製圖: Betty	UNIT 單位: MM	SIZE. 紙張尺寸: A4	
DATE 制表日: 2013/10/04	PAGE 張數: 1 OF 1	REV. 版次: A	PART NO. 料號: W2114-XXPDRTTWR